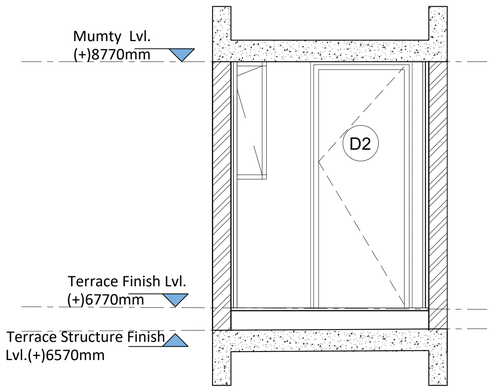

ELEVATION A
SCALE - 1:25

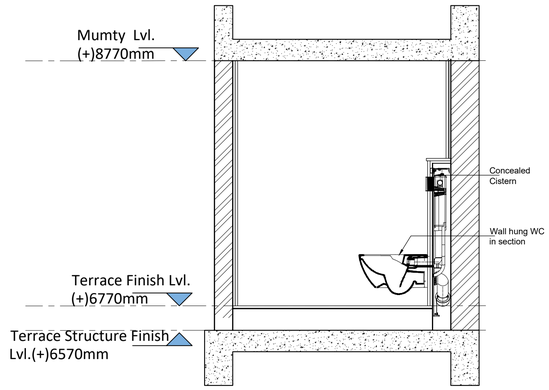

ELEVATION B
SCALE - 1:25

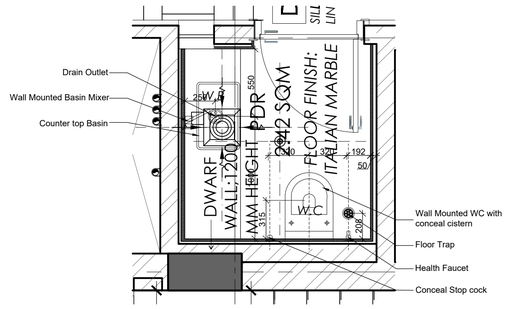

POWDER TOILET: PLAN
SCALE - 1:25

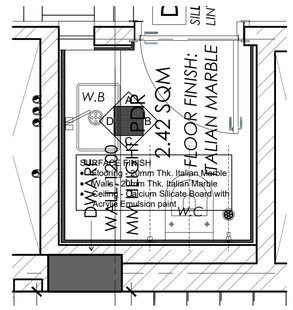

POWDER TOILET: FINISH PLAN
SCALE - 1:25

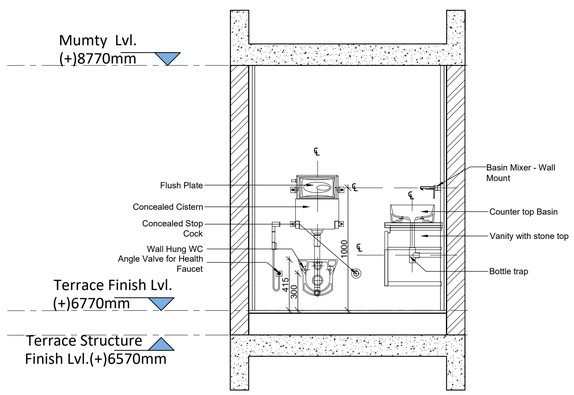

ELEVATION C
SCALE - 1:25

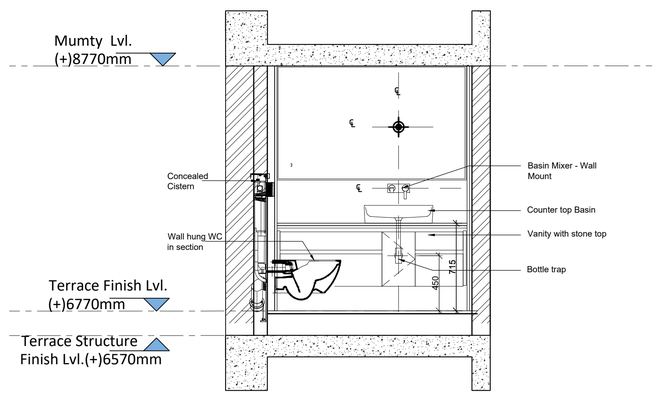

ELEVATION D
SCALE - 1:25

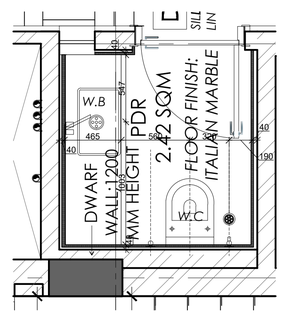

POWDER TOILET: LIGHTING, VENTILATION
SCALE - 1:25

NOTES :

This drawing is the property of M/s. SPACES ARCHITECTURE STUDIO and it shall not be used, reproduced or modified without written permission.
The drawing shall not be scaled, only written dimensions shall be followed.
This drawing supercedes all previous drawings issued for the information contained in the drawing.
All discrepancies shall be brought to the notice of the architects before execution of the work.
Any modifications at site w/o prior written information to the Architect are the responsibility of the Owner.

CONSTRUCTION NOTES :

1. ALL OPENINGS SHALL HAVE A 100 MM RCC JAMB; REFER TO JAMB DETAILS.
2. ALL OPENING SIZES PROVIDED ARE ROUGH OPENING SIZES

LEGENDS :

REVISION NOTES :

No.	DETAIL	DESCRIPTION

PROJECT:
SOUTH AFRICA HIGH COMMISION

PROJECT OWNER/ DEVELOPER:
INTERNATIONAL RELATIONS & COOPERATION, REPUBLIC OF SOUTH AFRICA

ARCHITECT:
Spaces Architecture Studio
V-12/23 DLF-3, Gurugram.
Ph.: 0124-4734320
e-mail: contact@studiosas.in
https://www.studiosas.in

CONSULTANT:

PURPOSE OF DWG:
- [x] Issued for Tender
- [ ] Issued for Construction
- [ ] Issued for Review
- [ ] Issued for Information

DRAWING TITLE:
Residence : Powder (Terrace) Toilet Elevations, Lighting & Ventilation

DISCIPLINE : ARCHITECTURE 16.10.25

DRAWING NO: SAS/SA/STAGE4/A (RES)7.29 & 7.30 REV:

N